Technical Report

Rotary Tattoo Machine
by

ABSTRACT

This report contains the technical data of motors, mechanics, general product and differentials of the Thunder Moon Rotary tattoo machine, produced by Magic Moon Tattoo Supply.

1. PRODUCT

Designed weighing only 105 grams with a modern and bold design. Manufactured in special aluminum, machined in CNC equipment, hand polished, anodized and assembled by hand with the highest standards of control and quality. Built with strength, precision, low noise, low vibration and special features.

Thunder Moon design

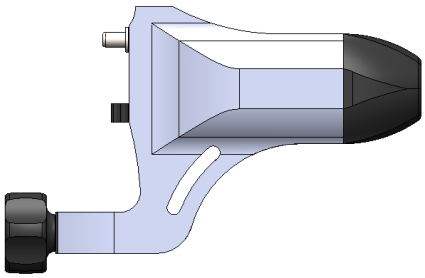

2. TECHNICAL INFORMATION

2.1. Motor: Using its own "electric motor" the Thunder Moon presents an unique performance of speed/strenght. Below is the motor performance parameters table (table 1). And its performance curve (graphic 1).

Table 1 – Motor parameters

Parameters Table		F/L	Eff (max)	P (max)	Stall
Torque	g.cm	0	40.73	126.72	253.44
Speed	RPM	9180	7705	4590	0
Current	mA	80	417.8	1130.9	2181.8
Output	W	0	3.22	5.97	0
Efficiency	%	0	64.2%	44.0%	0

Parameters		
Torque Constant	120.582	g.cm/A
Speed Constant	794	RPM/V
Motor regulation	36.2	RPM/g.cm

Graphic 1 – Performance motor curve

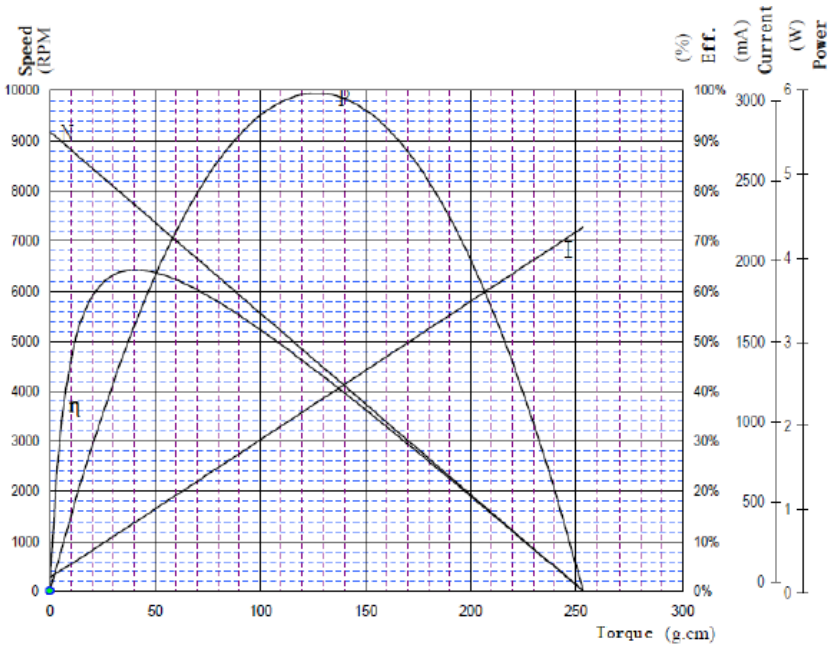

In addition to the motor chart, a comparison was made of its speed at various voltages with and without load, it can be seen at table 2.

Table 2 – Comparison motor with and without load

	Without Load		
Applied Voltage (V)	**Current (A)**	**Power (W)**	**Hz**
6	0,034	0,204	71,6
6,5	0,034	0,204	79,2
7	0,034	0,204	86,12
7,5	0,034	0,204	91,46
8	0,035	0,21	99,85
8,5	0,035	0,21	106,07
9	0,035	0,21	112,15
9,5	0,035	0,21	118,7
10	0,035	0,21	125,44
10,5	0,035	0,21	132,03
11	0,036	0,216	136,7
11,5	0,036	0,216	143,6
12	0,036	0,216	150,1

Applied Voltage (V)	With Load		
	Current (A)	Power (W)	Hz
6	0,114	0,684	68,96
6,5	0,129	0,774	74,32
7	0,135	0,81	80,56
7,5	0,147	0,882	85,9
8	0,16	0,96	91,1
8,5	0,173	1,038	96,86
9	0,188	1,128	102,4
9,5	0,206	1,236	107,5
10	0,213	1,278	113,2
10,5	0,194	1,164	121,13
11	0,193	1,158	127,6
11,5	0,224	1,344	131,55
12	0,258	1,548	135,73

As stated before and shown by the data it is important to pay attention to the speed and strenght values obtained by such a small motor. These data together are superior to any competitors who usually only deliver one of the points.

2.2. Mechanics: Machined pieces make the Thunder Moon a reference. It works making a very low noise and almost no vibration. This was achieved because of the balanced stainless steel crankshaft (picture 1) and a polyacetal piston (picture 2) manually adjusted for each assembled machine.

Picture 1 – Stainless steel cranckshaft

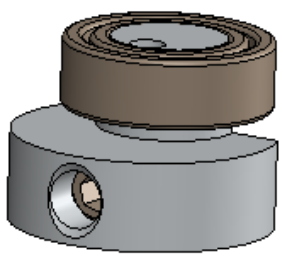

Picture 2 – Polyacetal piston

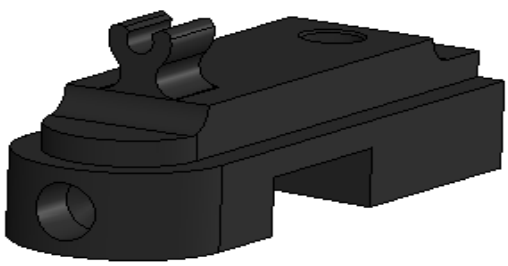

The mechanism also has a clip for holding the needle eliminating the classic rubber band or the tensioner with bearings.

2.3 Differentials: One of the reasons the Thunder Moon is a reference, is its differentials. The machine presented 2 innovations that surprise and facilitate the life of the artist.

1. Pre-tensioning the Grip (Picture 3)

Picture 3 – Zoom at the grip pre-tensioning system

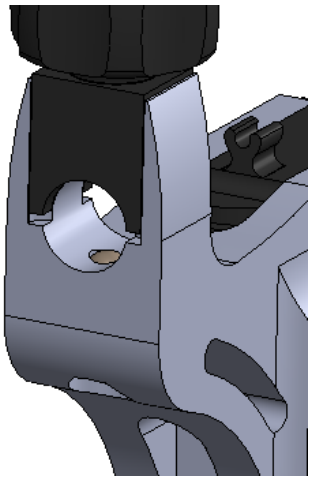

System capable of keeping the GRIP attached to the machine in any position in which it is being held, allowing the artist to have complete freedom of hands when adjusting the exposure of the needle.

2. Magnetic connector (Picture 4)

Picture 4 – Zoom at the magnetic connector

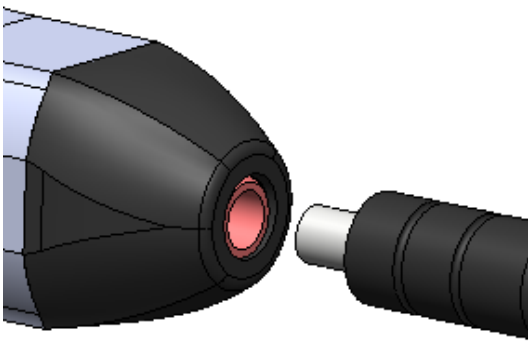

The magnetic electrical connection system replaces traditional connectors with advantages at several points:

- Facilitates connection, since it does not requires effort;
- Reduces chance of spontaneous disconnection due to force exerted by the magnet;
- Allows the machine to rotate around its own axis.

3. MAINTENANCE INSTRUCTIONS

For its correct operation the machine needs simple care that can be done by any user:

1. After each tattoo process, clean the anodized surface of the machine with alcohol and paper towel.

2. Every 40 hours or whenever there is accumulated dirt on magnetic plug, clean the tip of the cable with alcohol and paper towel and the machine jack with cotton swab and alcohol.

3. Every 120 hours of use or whenever the machine is to be operated after a long standing period, lubricate using a brush on both sides of the piston with the white grease that comes with the machine.

APPENDIX 1 – PARAMETERS TABLE AND PERFORMANCE MOTOR CURVE.

Parameters Table		F/L	Eff (max)	P (max)	Stall
Torque	g.cm	0	40.73	126.72	253.44
Speed	RPM	9180	7705	4590	0
Current	mA	80	417.8	1130.9	2181.8
Output	W	0	3.22	5.97	0
Efficiency	%	0	64.2%	44.0%	0

Parameters		
Torque Constant	120.582	g.cm/A
Speed Constant	794	RPM/V
Motor regulation	36.2	RPM/g.cm

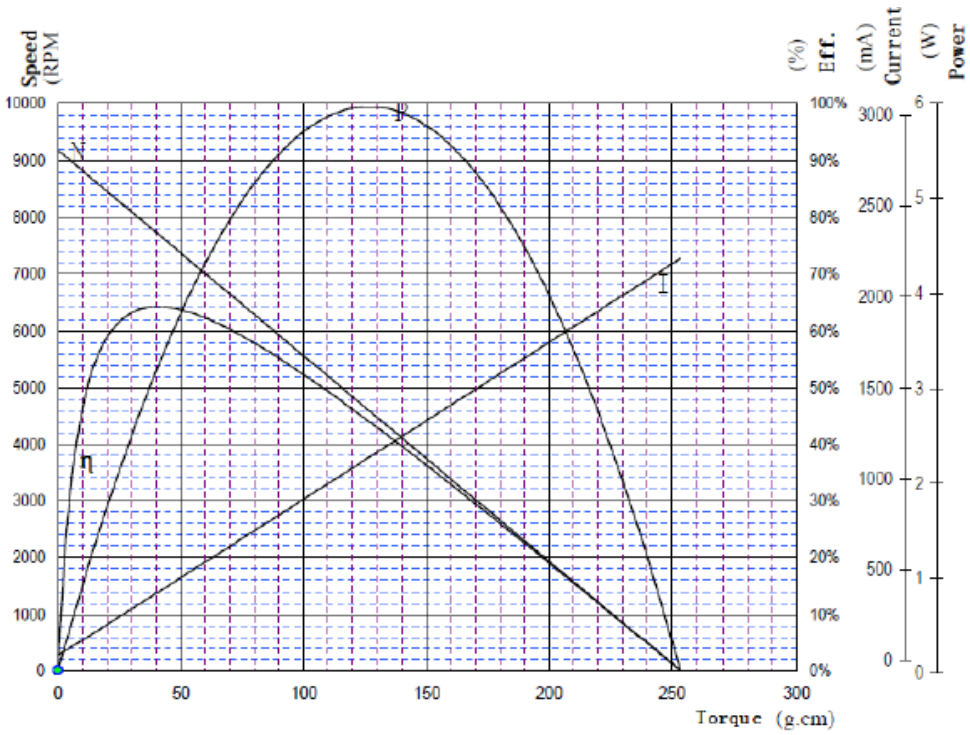

APPENDIX 2 - COMPARISON MOTOR WITH OR WITHOUT LOAD

	Without Load				With Load			
Applied Voltage (V)	Current (A)	Power (W)	Hz	RPM	Current (A)	Power (W)	Hz	RPM
6	0,034	0,204	71,6	4296	0,114	0,684	68,96	4137,6
6,1	0,034	0,204	72,03	4321,8	0,119	0,714	69,98	4198,8
6,2	0,034	0,204	74,15	4449	0,128	0,768	70,913	4254,78
6,3	0,034	0,204	77,8	4668	0,121	0,726	72,3	4338
6,4	0,034	0,204	78,23	4693,8	0,125	0,75	73,35	4401
6,5	0,034	0,204	79,2	4752	0,129	0,774	74,32	4459,2
6,6	0,034	0,204	81,2	4872	0,132	0,792	75,22	4513,2
6,7	0,034	0,204	82,31	4938,6	0,135	0,81	76,4	4584
6,8	0,034	0,204	83,51	5010,6	0,137	0,822	77,65	4659
6,9	0,034	0,204	83,95	5037	0,139	0,834	78,83	4729,8
7	0,034	0,204	86,12	5167,2	0,135	0,81	80,56	4833,6
7,1	0,034	0,204	87,65	5259	0,135	0,81	81,65	4899
7,2	0,034	0,204	88,73	5323,8	0,136	0,816	82,64	4958,4
7,3	0,034	0,204	89,37	5362,2	0,141	0,846	83,802	5028,12
7,4	0,034	0,204	91,1	5466	0,145	0,87	84,8	5088
7,5	0,034	0,204	91,46	5487,6	0,147	0,882	85,9	5154
7,6	0,035	0,21	93,62	5617,2	0,155	0,93	86,51	5190,6
7,7	0,035	0,21	95,74	5744,4	0,157	0,942	87,95	5277
7,8	0,035	0,21	97,38	5842,8	0,158	0,948	88,8	5328
7,9	0,035	0,21	98,72	5923,2	0,16	0,96	90,2	5412
8	0,035	0,21	99,85	5991	0,16	0,96	91,1	5466
8,1	0,035	0,21	101,16	6069,6	0,161	0,966	92,61	5556,6
8,2	0,035	0,21	102,6	6156	0,167	1,002	93,65	5619
8,3	0,035	0,21	103,8	6228	0,172	1,032	94,51	5670,6
8,4	0,035	0,21	105,06	6303,6	0,173	1,038	95,65	5739
8,5	0,035	0,21	106,07	6364,2	0,173	1,038	96,86	5811,6
8,6	0,035	0,21	107,2	6432	0,174	1,044	98,18	5890,8
8,7	0,035	0,21	108,8	6528	0,175	1,05	99,33	5959,8
8,8	0,035	0,21	110,06	6603,6	0,178	1,068	100,56	6033,6
8,9	0,035	0,21	111,2	6672	0,181	1,086	101,6	6096
9	0,035	0,21	112,15	6729	0,188	1,128	102,4	6144
9,1	0,035	0,21	113,31	6798,6	0,195	1,17	103,46	6207,6
9,2	0,035	0,21	115,03	6901,8	0,199	1,194	104,1	6246
9,3	0,035	0,21	116,02	6961,2	0,203	1,218	105,2	6312
9,4	0,035	0,21	117,2	7032	0,21	1,26	106,3	6378
9,5	0,035	0,21	118,7	7122	0,206	1,236	107,5	6450
9,6	0,035	0,21	120,13	7207,8	0,21	1,26	108,68	6520,8
9,7	0,035	0,21	121,32	7279,2	0,206	1,236	110,01	6600,6
9,8	0,035	0,21	123,05	7383	0,212	1,272	111,08	6664,8
9,9	0,035	0,21	124,07	7444,2	0,219	1,314	111,31	6678,6
10	0,035	0,21	125,44	7526,4	0,213	1,278	113,2	6792
10,1	0,035	0,21	126,85	7611	0,228	1,368	113,4	6804
10,2	0,035	0,21	128,22	7693,2	0,173	1,038	118,6	7116
10,3	0,035	0,21	129,54	7772,4	0,186	1,116	119,15	7149
10,4	0,035	0,21	130,46	7827,6	0,189	1,134	120,3	7218
10,5	0,035	0,21	132,03	7921,8	0,194	1,164	121,13	7267,8
10,6	0,035	0,21	133,05	7983	0,199	1,194	122,17	7330,2
10,7	0,035	0,21	134,16	8049,6	0,196	1,176	123,5	7410
10,8	0,035	0,21	135,6	8136	0,202	1,212	124,56	7473,6
10,9	0,035	0,21	136,2	8172	0,197	1,182	126,33	7579,8
11	0,036	0,216	136,7	8202	0,193	1,158	127,6	7656
11,1	0,036	0,216	137,9	8274	0,2	1,2	128,71	7722,6
11,2	0,036	0,216	139,8	8388	0,211	1,266	129,41	7764,6
11,3	0,036	0,216	140,01	8400,6	0,212	1,272	130,15	7809
11,4	0,036	0,216	142,2	8532	0,221	1,326	130,6	7836
11,5	0,036	0,216	143,6	8616	0,224	1,344	131,55	7893
11,6	0,036	0,216	145,5	8730	0,221	1,326	133,15	7989
11,7	0,036	0,216	146,9	8814	0,235	1,41	133,66	8019,6
11,8	0,036	0,216	147,8	8868	0,248	1,488	133,7	8022
11,9	0,036	0,216	148,23	8893,8	0,249	1,494	135,13	8107,8
12	0,036	0,216	150,1	9006	0,258	1,548	135,73	8143,8

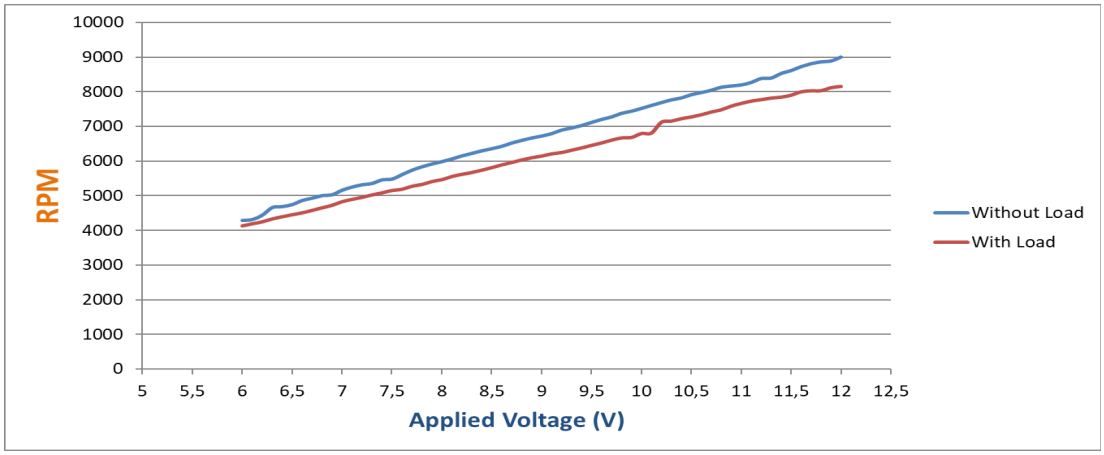
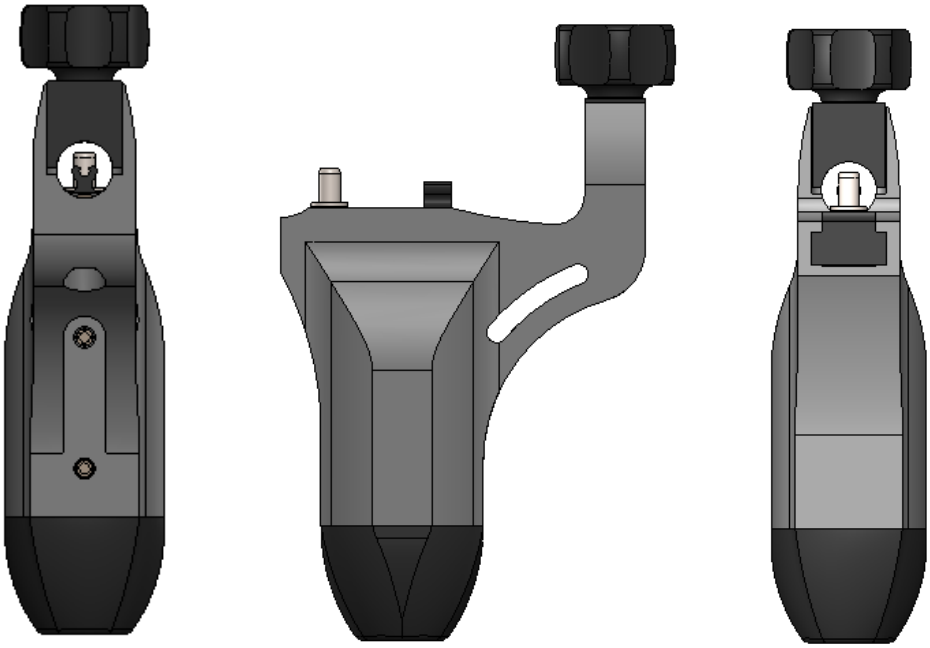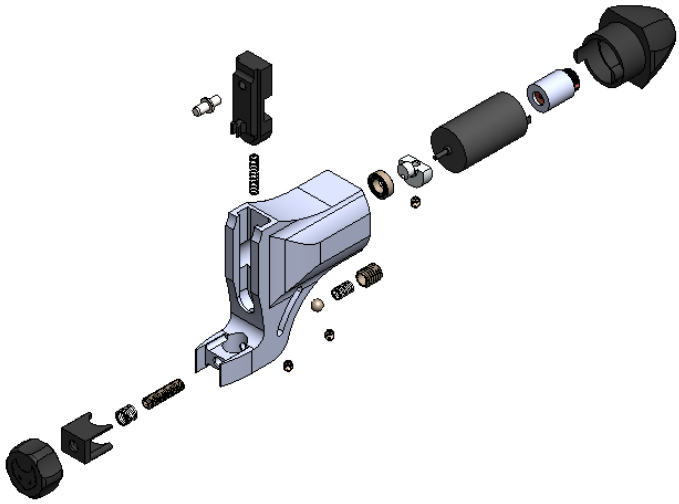
APPENDIX 3 – THUNDER MOON MAINS AND EXPLODED VIEW